1103INT UNIVERSAL TRANSMITTER

Installation Guide

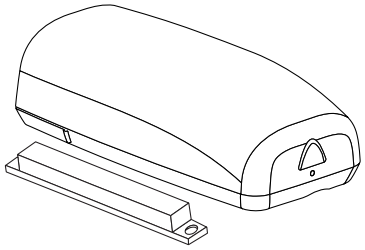

Figure 1: 1103INT Universal Transmitter

GET STARTED

The 1103INT Universal Transmitter is a two-input transmitter with wall and case tamper typically used for burglary door and window applications. The transmitter has two internal magnetic reed switches and an onboard terminal block for external contact wiring with an end-of-line resistor. The transmitter features 128-bit AES encryption.

Both sets of contacts, internal and external, can be programmed to operate at the same time. Two independent zones from one transmitter.

The transmitter also features Disarm/Disable functionality. When this option is set to YES, Zone Tripped Messages are disabled when the system is disarmed to allow for extended transmitter battery life. Supervision, Tamper, and Low Battery are the only messages that are sent to the panel when the system is disarmed.

Compatibility

- 1100XINT Wireless Receivers Version 700 and Higher
- 1100DINT Wireless Receivers Version 700 and Higher
- XT30INT Series Panels Version 693 and Higher
- XTLtouchINT/XTLplusINT Series Panels Version 693 and Higher
- XR150INT/XR550INT Series Panels Version 693 and Higher

What is Included?

- One 1103INT Universal Transmitter
- Magnet with Commercial Housing
- 3.0 V Lithium CR123A Battery
- Model 312 470K EOL Resistor
- Hardware Pack

1 PROGRAM THE PANEL

Refer to the panel programming guide as needed.

1. If using an XT Series International Panel, enter **665** (PRO) at the keypad to access the **PROGRAMMER** menu. If using an XR Series International Panel, enter **6653** (PROG).
2. In **ZONE INFORMATION**, enter the wireless **ZONE NO:** and press **CMD**.
3. Enter the **ZONE NAME** and press **CMD**.
4. Select the **ZONE TYPE** and press **CMD**.
5. At the **NEXT ZN?** prompt, select **NO**.
6. Select **YES** when **WIRELESS?** displays.
7. Enter the eight-digit **SERIAL#** and press **CMD**.
8. At **CONTACT**, select either **INTERNAL** or **EXTERNAL**.

Note: Use consecutive zone numbers if using both internal and external contacts. Program the external contact first if using both internal and external contacts with Disarm/Disable functionality.

9. If **EXTERNAL** was chosen in Step 7, chose **NO** or **YES** at the **NORM OPEN** prompt.
10. Enter the **SUPRVSN TIME** and press **CMD**.
11. At **DISARM DISABLE**, select **NO** or **YES**.
12. At the **NEXT ZN?** prompt, select **YES** to finish programming or select **NO** for additional programming options.
13. In **SYSTEM OPTIONS**, at **1100 ENCRYPTION**, select **ALL** to only add encrypted wireless devices to the system. Select **BOTH** to allow both encrypted and non-encrypted wireless devices to be programmed.
14. The default passphrase appears at **ENTER PASSPHRASE**. Press **CMD** to keep the default. Press any select key or area to change the passphrase and enter an 8-character hexadecimal string (0-9, A-F).

2 INSTALL THE BATTERY

Use a 3.0 V lithium battery, a DMP Model CR123 battery, or an equivalent model from Sony or Murata. When setting up a wireless system, program zones and connect the wireless receiver before installing the battery.

1. Push the button on the end of the 1103INT and separate the two halves.
2. Observe polarity and place the battery in the holder and press it into place.

3 SELECT A LOCATION

The 1103INT provides a survey LED that allows one person to confirm communication with the wireless receiver or panel while the cover is removed.

1. Hold the 1103INT in the exact desired location.
2. Press the tamper switch to send data to the panel and determine if communications is confirmed or faulty.

Confirmed: If communication is confirmed, for each press or release of the tamper switch the LED blinks immediately on and immediately off.

Faulty: If communication is faulty, the LED remains on for about 8 seconds or flashes multiple times in quick succession. Relocate the 1103INT or the wireless receiver until the LED confirms clear communication.

4 MOUNT THE 1103INT TRANSMITTER

Caution: Do not mount on ferromagnetic surfaces.

Mount the Transmitter

1. Remove the battery.
2. Hold the transmitter in place with the magnetic reed switch closest to where the magnet will be mounted, See Figure 2. Ensure the transmitter and the magnet are no more than 1" (2.54 cm) apart.
3. Place the supplied #4 screw into the mounting hole and secure the transmitter to the surface.
4. Replace the battery.
5. Snap the transmitter cover back onto the base.

Mount the Magnet

1. Place and hold the magnet directly on the door closest to the magnetic reed switch, no more than 1" (2.54 cm) apart from the transmitter. See Figure 3.
2. Use the provided #4 screws to mount the magnet.

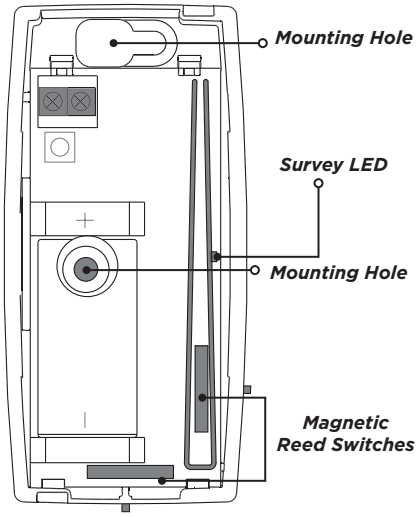

Figure 2: Transmitter Components

Wiring and Connecting Contacts

When connecting an external contact to the terminal block in burglary applications, DMP recommends using 18 or 22 AWG unshielded wire. Do not use twisted pair or shielded wire. Locate a contact within 100 ft (30.5 meters) of the 1103INT. Connect the contact as normally open (N/O) or normally closed (N/C) with the 470K end-of-line resistor. See Figure 4.

Note: The Normally Open **YES NO** option in the panel wireless zone programming has no effect on the transmitter operation when using the 470K end-of-line resistor.

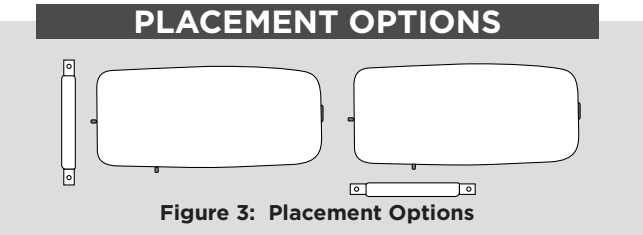

Figure 3: Placement Options

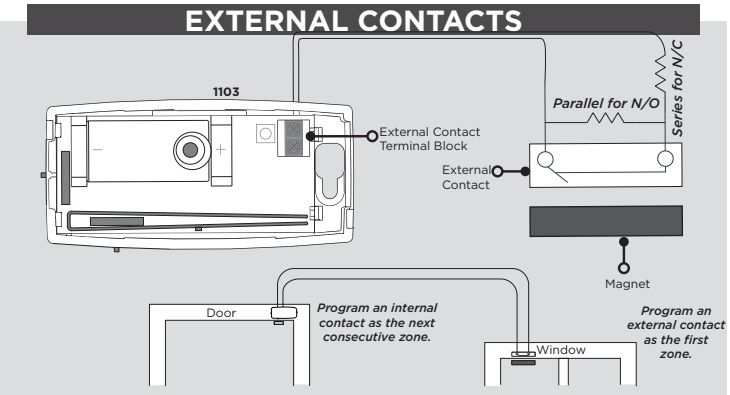

Figure 4: Contact Terminal Block Wiring

5 TEST THE 1103INT TRANSMITTER

After the transmitter has been installed, test to confirm that it is communicating reliably with the panel. Use the Tech APP™ to perform a Wireless Check-in Test on the system or complete the following steps to perform a Check-in Test from a keypad that is connected to the panel.

1. At the keypad for XT Series panels, enter **8144** (WALK). At the keypad for XR Series panels, enter **814** (WAL). Select **WLS**.
2. If the 1103INT fails to check in at the keypad, relocate the wireless device, receiver, or panel.

ADDITIONAL INFORMATION

Using XT30INT/XTLplusINT/XTLtouchINT Series Panels

The 1103INT is designed for the XR150INT/XR550INT Series panels. However, it can be used with the XT30INT/XTLplusINT/XTLtouchINT Series panels.

When used with XT panels, the tamper indication is sent through the internal contact zone only. When using the external contact, the internal contact must also be programmed in a separate zone to provide tamper indication. The supplied magnet must be mounted next to the 1103INT internal contact to restore the zone and allow the tamper switch to have priority.

Replace the Battery

1. Push the button on the end of the transmitter and separate the two halves.
2. Remove the old battery and dispose of it properly.
3. Observing polarity, place the new battery in the holder and press into place.

   Note: Use only 3.0 V lithium CR123A batteries.
4. Place the cover back onto the 1103INT and snap back into place.

Sensor Reset to Clear LOBAT

When the battery needs to be replaced, a **LOBAT** message will display on the keypad. Once the battery is replaced, a sensor reset is required at the system keypad to clear the **LOBAT** message.

1. On a Thinline keypad, press and hold "**2**" for two seconds. On a touchscreen keypad press **RESET**.
2. Enter your user code if required.
3. The keypad displays **SENSORS OFF** followed by **SENSORS ON**.

COMPLIANCE SPECIFICATIONS

Reed Switch Distances

Break (Alarm)

X: 18.5 mm

Y: 41.5 mm

Z: 35.5 mm

Make (Restore)

X: 14.5 mm

Y: 39.0 mm

Z: 19.5 mm

1103INT UNIVERSAL TRANSMITTER

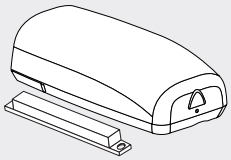

Specifications

Security Grade	2
Environmental Class	II
Operating Temperature	0°C - 49°C 32°F - 120°F
Relative Humidity	80%
Weight	.091 kg
Battery	
Life Expectancy	5 years (normal operation)
Type	3.0 V lithium CR123A
Low Battery	2.4 VDC or less
Frequency Range	863-869 MHz
Housing Material	Flame retardant ABS
Dimensions	3.3”L x 1.6”W x 1.2”H 8.4 L x 4.06 W x 3.05 H cm
Color	White

Accessories

CR123	3.0 V Lithium Battery

Patents

U. S. Patent No. 7,239,236

International Certificates

Intertek (ETL)

EN 50130-4:2011	EMC - Product Family Standard. Immunity Requirements for Components of Fire, Intruder, and Social Alarm Systems
EN 50130-5:2011	Alarm Systems. Environmental Test Methods
EN 50131-1:2006+A1;A2	Alarm Systems. Intrusion and Hold-up Systems. System Requirements
EN 50131-3:2009	Alarm Systems. Intrusion and Hold-up Systems. Control and Indicating Equipment
EN 50131-2-6:2008	Alarm Systems. Intrusion and Hold-up Systems. Intrusion Detectors. Requirements for Opening Contacts (Magnetic)
EN50131-5-3:2005+A1: 2008	Alarm Systems. Intrusion systems. Requirements for Interconnections Equipment using Radio Frequency Techniques
EN 61000-3-2:2009+A1;A2	Limits - Limits for Harmonic Current Emissions (Equipment Input Current less than or equal to 16 A per Phase)
EN 61000-3-3:2013	Limits - Limitation of Voltage Changes, Voltage Fluctuations and Flicker in Public Low-Voltage Supply Systems, for Equipment With Rated Current less than or equal to 16 A per Phase and Not Subject to Conditional Connection
EN 61000-6-4:2018	Generic Standard - Emission Standard for Industrial Environments

Designed, engineered, and manufactured in Springfield, MO using U.S. and global components.

LT-0702INT 1.01 22133

© 2023

INTRUSION • FIRE • ACCESS • NETWORKS

2500 North Partnership Boulevard
Springfield, Missouri 65803-8877

800.641.4282 | DMP.com